Specification – Mixmaster Builders

MBK-1-40-LF

Mixmaster Builders Sink Mixer 40mm



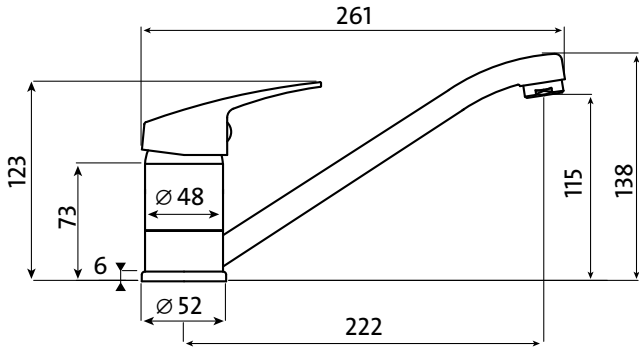

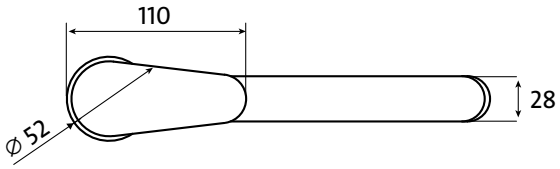

Information

Temperature Rating: 1 - 75°C
Pressure Rating: 150 - 500kPa
WELS 6 Star 4.5L/min
WELS Registration Codes: T44182

Available Finishes



MBK-1-40-LF
Chrome

MBK-1-40-B-LF
Black

MBK-1-40-BN-LF
Brushed Nickel

Maintenance and Care

- All surfaces should be cleaned with mild liquid detergent or soap and water.
- Do not use cream cleansers or citrus based cleaning products, as they are abrasive.
- Use of unsuitable cleaning agents may damage the surface.
- Any damage caused in this way will not be covered by warranty.

The information provided is a representation of the product depicted at this time. The designs and specifications are subject to change without notice. Prior to purchasing, please confirm all images, specifications, warranty and care instructions on our website at www.abey.com.au or contact our Customer Service Centre on 1800 809 143.

P: 1800 809 143 **E: mail@abey.com.au** **W: www.abey.com.au**