60cm Series 5 Contemporary Oven, 7 Function

Series 5 | Contemporary

Black Glass



This timeless and expressive oven features 7 versatile cooking functions, with easy to use dials for simple control

- 7 versatile cooking functions including Air Fry and Pizza Bake
- Easy to use dials for simple control
- Even heat distribution thanks to AeroTech™ technology
- Generous 85L total capacity

DIMENSIONS

Height	598 mm
Width	596 mm
Depth	565 mm

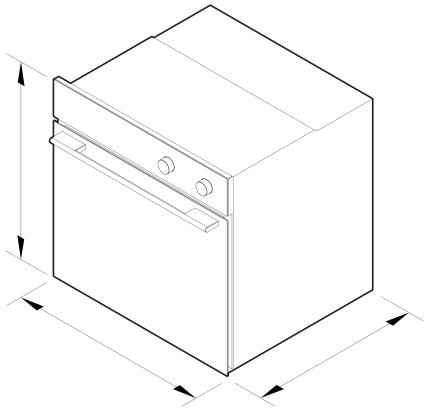

FEATURES & BENEFITS

Flexible Cooking Functions

Each function has been perfected to deliver the optimal heat for a wide range of dishes, with 7 functions including Air Fry, Classic Bake, and Pizza Bake.

Clear Controls

Simple and intuitive control makes cooking easy, with a dial that enables straightforward function selection.

Multi-functional Accessories

Thoughtfully designed accessories expand your cooking possibilities. Designed to fit seamlessly into the side ladders, each accessory sits securely in place for confident cooking. The Multi-Functional Air Fry Tray promotes even airflow for crisp, golden results, while the Roasting Dish is ideal for braising or slow cooking.

Cook With Consistency

For consistent results throughout the oven, AeroTech™ technology circulates heat evenly throughout the cavity.

Generous Capacity

More room means greater flexibility when cooking. With an 85L total capacity, this oven provides ample space for multiple dishes, larger meals, and everyday cooking.

Engineered for Life

Built for enduring performance, our Ovens undergo intensive testing equivalent to 7,300 hours or 20 years of real-world use, delivering durability you can rely on.

SPECIFICATIONS

Accessories (included)

Multi-functional Air fry tray	1
Roasting dish	1
Wire shelf	1

Capacity

Shelf positions	6
Total capacity	85 L
Usable capacity	72 L

Cleaning

Acid resistant graphite enamel	•
Removable oven door	•

Removable oven door inner glass	•
Removable side ladders	•

Controls

Audio feedback	•
Electronic capacitive touch controls	•
Electronic clock	•
Internal Light	•

Functions

Air fry	•
Bake	•
Classic bake	•
Fan bake	•
Fan forced	•
Grill	•
Number of functions	7
Pizza bake	•

Performance

AeroTech™ technology	•
Convection	•
Grill power	3000 W
Temperature range	50°C - 250°C

Power requirements

Connection type	Hard-wired
Dedicated circuit	16 A
Rated power	2700-3200 W
Supply frequency	50 Hz
Supply voltage	220-240 V

Product dimensions

Depth	565 mm
Height	598 mm
Width	596 mm

SKU	85919

The product dimensions and specifications in this page apply to the specific product and model. Under our policy of continuous improvement, these dimensions and specifications may change at any time. You should therefore check with Fisher & Paykel's Customer Care Centre to ensure this page correctly describes the model currently available. © Fisher & Paykel Appliances Ltd 2020

Other product downloads available at fisherpaykel.com

- Installation Considerations (English)
- DWG
- DXF
- Care & Maintenance (English)
- First Use (English)
- Installation Guide (English)
- Planning Guide (English)
- Revit
- Rhino
- Safety & Warnings (English)
- Sketchup

Where applicable:

All appliances use energy, and energy usage typically generates carbon emissions. **Fisher & Paykel Appliances' In-use Energy Carbon Emissions Estimate** indicates carbon emissions from a product's in-use energy. This is calculated either annually or per cycle, using the product's market-specific energy label energy consumption data multiplied by the carbon emissions factor for energy in your country or region.

Our In-use Energy Carbon Emissions Estimate is designed to assist customers in making informed purchasing decisions when comparing different Fisher & Paykel products. For example, a heat pump dryer typically has a lower In-use Energy Carbon Emissions Estimate than a vented dryer.

24/7

A PEACE OF MIND SALE
24 Hours 7 Days a Week Customer Support

T 1300 650 590 Wwww.fisherpaykel.com