60cm Series 5 Contemporary Pyrolytic Oven

Series 5 | Contemporary

Black Glass



This timeless and expressive oven with pyrolytic cleaning features 9 versatile functions, with dial controls and illuminated icons for simple operation

- 9 versatile functions including Air Fry and Pizza Bake
- Pyrolytic self-cleaning breaks down food residue for simple maintenance
- Dial control with illuminated icons for simple operation
- Multi-Functional Air Fry Tray for Air Frying, Baking, or Grilling, with a perforated design for even airflow

DIMENSIONS

Height	598 mm
Width	596 mm
Depth	565 mm

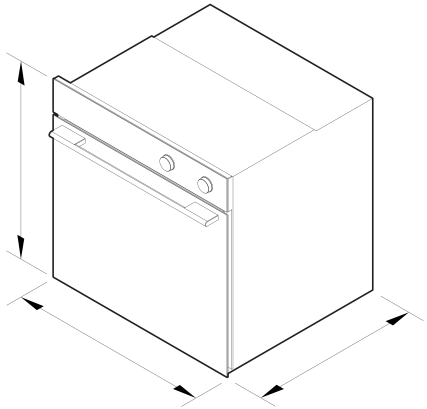

FEATURES & BENEFITS

Flexible Cooking Functions

Each function has been perfected to deliver the optimal heat for a wide range of dishes, with 9 functions including Air Fry, Fan Forced, and Pizza Bake.

Considered Controls

Simple and intuitive control makes cooking easy, with a responsive dial and clear illuminated icons that enable straightforward function selection.

Multi-functional Accessories

Thoughtfully designed accessories expand your cooking possibilities. Designed to fit seamlessly into the side ladders, each accessory sits securely in place for confident cooking. The Multi-Functional Air Fry Tray promotes even airflow for crisp, golden results, while the Roasting Dish is ideal for braising or slow cooking.

Effortless Cleaning

Pyrolytic cleaning uses very high temperatures to break down food residue into fine ash, so there's no need for scrubbing or harsh chemicals. Once the cycle is complete, any remaining ash can be easily wiped away, helping keep your oven clean with minimal effort and less time spent on maintenance.

Cook With Consistency

For consistent results throughout the oven, AeroTech™ technology circulates heat evenly throughout the cavity.

Generous Capacity

More room means greater flexibility when cooking. With an 85L total capacity, this oven provides ample space for multiple dishes, larger meals, and everyday cooking.

Engineered for Life

Built for enduring performance, our Ovens undergo intensive testing equivalent to 7,300 hours or 20 years of real-world use, delivering durability you can rely on.

SPECIFICATIONS

Accessories (included)

Flat brushed baking tray	1
Multi-functional Air fry tray	1
Roasting dish	1
Wire shelf	1

Capacity

Shelf positions	6
Total capacity	85 L

Usable capacity	72 L

Cleaning

Acid resistant graphite enamel	•
Pyrolytic self-clean	•
Removable oven door	•
Removable oven door inner glass	•
Removable side ladders	•

Controls

Audio feedback	•
Automatic pre-set temperatures	•
Celsius/Fahrenheit temperature	•
Electronic capacitive touch controls	•
Electronic clock	•
Electronic oven control	•
Interface type	Touch button with dials
Internal Light	•

Functions

Air fry	•
Bake	•
Fan bake	•
Fan forced	•
Fan grill	•
Grill	•
Number of functions	9
Pizza bake	•
Roast	•

Performance

AeroTech™ technology	•
Automatic rapid pre-heat	•
Grill power	3000 W
Temperature range	50°C - 250°C

Power requirements

Connection type	Hard-wired
Dedicated circuit	16 A
Rated power	2800-3300 W
Supply frequency	50 Hz
Supply voltage	220-240 V

Product dimensions

Depth	565 mm
Height	598 mm
Width	596 mm

Safety

Control panel key lock	•

SKU	85912

The product dimensions and specifications in this page apply to the specific product and model. Under our policy of continuous improvement, these dimensions and specifications may change at any time. You should therefore check with Fisher & Paykel's Customer Care Centre to ensure this page correctly describes the model currently available. © Fisher & Paykel Appliances Ltd 2020

Other product downloads available at fisherpaykel.com

- Installation Considerations (English)
- DWG
- DXF
- Care & Maintenance (English)
- First Use (English)
- Installation Guide (English)
- Planning Guide (English)
- Revit
- Safety & Warnings (English)
- Sketchup

Where applicable:

All appliances use energy, and energy usage typically generates carbon emissions. **Fisher & Paykel Appliances' In-use Energy Carbon Emissions Estimate** indicates carbon emissions from a product's in-use energy. This is calculated either annually or per cycle, using the product's market-specific energy label energy consumption data multiplied by the carbon emissions factor for energy in your country or region.

Our In-use Energy Carbon Emissions Estimate is designed to assist customers in making informed purchasing decisions when comparing different Fisher & Paykel products. For example, a heat pump dryer typically has a lower In-use Energy Carbon Emissions Estimate than a vented dryer.

24/7

A PEACE OF MIND SALE
24 Hours 7 Days a Week Customer Support

T 1300 650 590 **W**www.fisherpaykel.com