60cm Series 7 Minimal Compact Combi-Microwave Oven

Series 7 | Minimal

Black Glass



Refined and minimal, this compact oven combines the speed of microwave and the versatility of convection with method-led cooking.

- Create perfect results with precise cooking methods, including Microwave and Grill, via the 5" touchscreen
- Combi-Microwave cooking provides fast, even results, with a wired temperature sensor for ultimate control
- Designed to match our Minimal style appliances, for the ultimate kitchen solution
- With WiFi and the SmartHQ™ app, you can remotely monitor cooking progress and control key functions

DIMENSIONS

Height	458 mm
Width	596 mm
Depth	565 mm

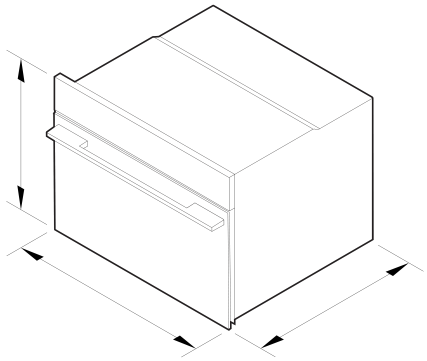

FEATURES & BENEFITS

Exceptional Performance

Offering Microwave, Convection, or a combination of both, this oven provides exceptional versatility for every cooking style. Guided by a deep understanding of the Science of Cooking, we've mastered the balance of heat, humidity and airflow to deliver precise cooking methods, from Microwave to Grill, that bring out the full potential of every ingredient. With ActiveVent™ to manage humidity levels, it delivers consistently perfect results in every dish.

Engineered for Life

Built for enduring performance, our Ovens undergo intensive testing equivalent to 7,300 hours or 20 years of real-world use, delivering durability you can rely on.

Efficient and Delicious

Microwave Assist combines the speed of microwave energy with the power of convection heat to accelerate cooking and enhance the development of colour. Microwaves gently warm from within, allowing food to cook evenly while retaining its natural moisture. A 1.5kg Chicken roasts 30-40% faster compared to convection alone, with a golden and crisp skin and succulent meat beneath, while root vegetables caramelise beautifully, tender inside with deep and concentrated flavour.

Considered Design

Every detail of our Minimal style appliances has been meticulously designed. With a black glass finish, refined handle, and intuitive 5" touchscreen, every element aligns beautifully. Create your ultimate kitchen solution with our range of ovens and companion products, creating a seamless and cohesive look when installed side by side or stacked with perimeter gaps as small as 2mm. The perfect pairing of style and precision for your kitchen.

Mastery of Temperature

Whether you want to Microwave Popcorn, Roast a Chicken or Melt Chocolate, each of our precise cooking methods has been carefully calibrated with the optimal combination of heat, temperature and microwave energy to cook evenly while preserving texture and flavour. With additional guidance for using the Temperature Sensor, it brings true mastery of temperature to every dish.

Quickstart for Easy Operation

For everyday convenience in an instant, Quickstart Microwave delivers fast, precise results. Simply select the duration and power level, and it's ready to go. Intuitive and effortless, it combines the speed of microwave cooking with the performance and reliability of a premium appliance.

Generous Capacity

The rectangular cavity and absence of a turntable make it easy to cook large dishes, maximising the oven's full 49L capacity. Microwave-safe metal side ladders provide even cooking across all levels, giving you flexibility and consistent results every time.

Connect and Control

Connected cooking brings intelligence and ease to your kitchen. With Wi-Fi and the SmartHQ™ app, you can monitor and control your oven remotely, receive real time notifications, and access helpful guidance. Software updates are delivered through the app to keep your appliance current with the latest features and functionality. Voice control with Google Assistant offers hands free convenience – simply speak to a connected device to open the door. For precise and confident cooking, our temperature sensors provide guidance to help you achieve perfect results.

SPECIFICATIONS

Accessories (included)

Glass tray	1
Grill rack	1 set
Step down wire shelf	1
Wire shelf	1
Wired temperature sensor	1

Capacity

Shelf positions	4
Total capacity	49 L
Usable capacity	38 L

Cleaning

Acid resistant graphite enamel	•
Drying cycle	•
Removable side ladders	•

Connected Features

Alerts and notifications	•
Cyber security updates until	14 / 07 / 2031
Education and onboarding	•
Monitoring	•
Remote operation	•
Software updates	•

Controls

Adjustable audio and display settings	•
Audio feedback	•
Automatic cooking/minute timer	•
Automatic pre-set temperatures	•
Celsius/Fahrenheit temperature	•
Delay start	•
Electronic oven control	•
Guided touchscreen cooking	•
Interface type	5" touchscreen
Internal Light	•
Intuitive touchscreen display	•
Multi-language display	true
Sabbath mode with Mehadrin certification	•
Smart appliance	•
Soft close doors	•
Voice control	•
Wireless temperature sensor compatible	•

Functions

Air fry	•
Bake	•
Classic fan	•
Dehydrate	•
Fan bake	•
Fan forced	•
Fan forced + microwave	•
Fan grill	•
Fan grill + microwave	•
Grill	•
Grill + microwave	•
Melt	•
Microwave	•
Number of functions	18
Quick start	•
Roast	•
Roast + microwave	•
Slow cook	•
Vent bake	•

Performance

ActiveVent™ system	•
AeroTech™ technology	•
Automatic rapid pre-heat	•
Grill power	3000 W
Method Cooking	•
Microwave power	900 W
Temperature range	50°C - 230°C

Power requirements

Connection type	Hard-wired
Dedicated circuit	16 A
Rated power	3350-3800 W
Supply frequency	50 Hz
Supply voltage	220-240 V

Product dimensions

Depth	565 mm
Height	458 mm
Width	596 mm

Safety

Control panel key lock	•

SKU	85936

The product dimensions and specifications in this page apply to the specific product and model. Under our policy of continuous improvement, these dimensions and specifications may change at any time. You should therefore check with Fisher & Paykel's Customer Care Centre to ensure this page correctly describes the model currently available. © Fisher & Paykel Appliances Ltd 2020

All appliances use energy, and energy usage typically generates carbon emissions. **Fisher & Paykel Appliances' In-use Energy Carbon Emissions Estimate** indicates carbon emissions from a product's in-use energy. This is calculated either annually or per cycle, using the product's market-specific energy label energy consumption data multiplied by the carbon emissions factor for energy in your country or region.

Our In-use Energy Carbon Emissions Estimate is designed to assist customers in making informed purchasing decisions when comparing different Fisher & Paykel products. For example, a heat pump dryer typically has a lower In-use Energy Carbon Emissions Estimate than a vented dryer.

24/7

A PEACE OF MIND SALE
24 Hours 7 Days a Week Customer Support

T 1300 650 590 Wwww.fisherpaykel.com

Other product downloads available at fisherpaykel.com

- Safety & Warnings (English)
- DWG
- DXF
- Care & Maintenance (English)
- First Use (English)
- Installation Considerations (English)
- Installation Guide (English)
- Planning Guide - 60cm Series 7 Minimal (English)
- Revit
- Rhino
- Sketchup

Where applicable: