# 76cm Series 9 Contemporary Compact Combi-Microwave Oven

Series 9 | Contemporary

Brushed Silver Glass



Timeless and expressive, this compact oven combines the speed of microwave and the versatility of convection with method-led cooking.

- Create perfect results with precise cooking methods, including Microwave and Grill, via the large 6.8” touchscreen
- Combi-Microwave cooking provides fast, even results, with a wired temperature sensor for ultimate control
- Designed to match our Contemporary style appliances, for the ultimate kitchen solution
- With WiFi and the SmartHQ™ app, you can remotely monitor cooking progress and control key functions

## DIMENSIONS

| | |
|---|---|
| Height | 458 mm |
| Width | 758 mm |
| Depth | 565 mm |

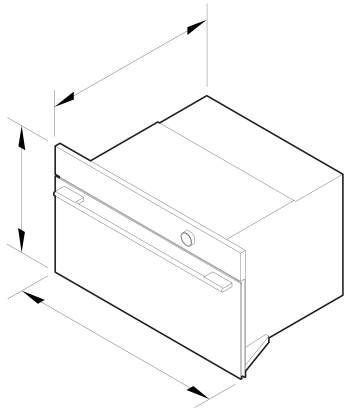

## FEATURES & BENEFITS

### EXCEPTIONAL PERFORMANCE

Offering Microwave, Convection, or a combination of both, this oven provides exceptional versatility for every cooking style. Guided by a deep understanding of the Science of Cooking, we’ve mastered the balance of heat, humidity and airflow to deliver precise cooking methods, from Microwave to Grill, that bring out the full potential of every ingredient. With ActiveVent™ to manage humidity levels, it delivers consistently perfect results in every dish.

### EFFICIENT AND DELICIOUS

Microwave Assist combines the speed of microwave energy with the power of convection heat to accelerate cooking and enhance the development of colour. Microwaves gently warm from within, allowing food to cook evenly while retaining its natural moisture. A 1.5kg Chicken roasts 30-40% faster compared to convection alone, with a golden and crisp skin and succulent meat beneath, while root vegetables caramelise beautifully, tender inside with deep and concentrated flavour.

### CONSIDERED DESIGN

Every detail of our Contemporary style appliances has been meticulously designed. With a brushed silver finish, round bar handle, and intuitive 6.8” touchscreen, every element aligns beautifully. Create your ultimate kitchen solution with our range of ovens and companion products, creating a seamless and cohesive look when installed side by side or stacked — with perimeter gaps as small as 2mm. The perfect pairing of style and precision for your kitchen.

### MASTERY OF TEMPERATURE

Whether you want to Microwave Popcorn, Roast a Chicken or Melt Chocolate, each of our precise cooking methods has been carefully calibrated with the optimal combination of heat, temperature and microwave energy to cook evenly while preserving texture and flavour. With additional guidance for using the Temperature Sensor, it brings true mastery of temperature to every dish.

### QUICKSTART FOR EASY OPERATION

For everyday convenience in an instant, Quickstart Microwave delivers fast, precise results. Simply select the duration and power level, and it’s ready to go. Intuitive and effortless, it combines the speed of microwave cooking with the performance and reliability of a premium appliance.

### GENEROUS CAPACITY

The rectangular cavity and absence of a turntable make it easy to cook large dishes, maximising the oven’s full 49L capacity. Microwave-safe metal side ladders provide even cooking across all levels, giving you flexibility and consistent results every time.

### CONNECT AND CONTROL

Connected cooking brings intelligence and ease to your kitchen. With WiFi and the SmartHQ™ app, you can monitor and control your oven remotely, receive real time notifications, and access helpful guidance. Software updates are delivered through the app to keep your appliance current with the latest features and functionality. Voice control with Google Assistant offers hands free convenience, while our temperature sensors support precise, confident cooking.

## SPECIFICATIONS

### Accessories (included)

| | |
|---|---|
| Chrome side ladders | 2 |
| Glass tray | 1 |
| Grill rack | 1 set |
| Step down wire shelf | 1 |
| Wire shelf | 1 |
| Wired temperature sensor | 1 |

### Capacity

| | |
|---|---|
| Shelf positions | 4 |
| Total capacity | 49 L |
| Usable capacity | 38 L |

### Cleaning

| | |
|---|---|
| Acid resistant graphite enamel | • |
| Drying cycle | • |
| Removable side ladders | • |

### Connected Features

| | |
|---|---|
| Alerts and notifications | • |
| Cyber security updates until | 02 / 04 / 2030 |
| Education and onboarding | • |
| Monitoring | • |
| Remote operation | • |
| Software updates | • |

### Controls

| | |
|---|---|
| Adjustable audio and display settings | • |
| Audio feedback | • |
| Automatic cooking/minute timer | • |
| Celsius/Fahrenheit temperature | • |
| Delay start | • |
| Dial with illuminated halo | • |
| Guided touchscreen cooking | • |
| Internal Light | • |
| Intuitive touchscreen display | • |
| Microwave timer | • |
| Multi-language display | true |
| Sabbath mode with Mehadrin certification | • |
| Smart appliance | • |
| Soft close doors | • |
| Temperature sensor | • |
| True convection oven | • |
| Voice control | • |

### Functions

| | |
|---|---|
| Air fry | • |
| Bake | • |
| Classic fan | • |
| Dehydrate | • |
| Fan bake | • |
| Fan forced | • |
| Fan forced + microwave | • |
| Fan grill | • |
| Fan grill + microwave | • |
| Grill | • |
| Grill + microwave | • |
| Melt | • |
| Microwave | • |
| Number of functions | 17 |
| Roast | • |
| Roast + microwave | • |
| Slow cook | • |
| Vent bake | • |

### Performance

| | |
|---|---|
| ActiveVent™ system | • |
| AeroTech™ technology | • |
| Automatic rapid pre-heat | • |
| Method Cooking | • |

### Power requirements

| | |
|---|---|
| Amperage | 16 A |
| Supply frequency | 50 Hz |
| Supply voltage | 220 - 240 V |

### Product dimensions

| | |
|---|---|
| Depth | 565 mm |
| Height | 458 mm |
| Width | 758 mm |

| | |
|---|---|
| SKU | 84973 |

The product dimensions and specifications in this page apply to the specific product and model. Under our policy of continuous improvement, these dimensions and specifications may change at any time. You should therefore check with Fisher & Paykel's Customer Care Centre to ensure this page correctly describes the model currently available. © Fisher & Paykel Appliances Ltd 2020

Other product downloads available at fisherpaykel.com

- Safety & Warnings (English)
- DWG
- DXF
- First Use (English)
- Installation Considerations (English)
- Installation Guide (English)
- Planning Guide - 76cm Contemporary (English)
- Revit
- Rhino
- SketchUp

Where applicable:

All appliances use energy, and energy usage typically generates carbon emissions. **Fisher & Paykel Appliances' In-use Energy Carbon Emissions Estimate** indicates carbon emissions from a product's in-use energy. This is calculated either annually or per cycle, using the product's market-specific energy label energy consumption data multiplied by the carbon emissions factor for energy in your country or region.

Our In-use Energy Carbon Emissions Estimate is designed to assist customers in making informed purchasing decisions when comparing different Fisher & Paykel products. For example, a heat pump dryer typically has a lower In-use Energy Carbon Emissions Estimate than a vented dryer.

24/7

A PEACE OF MIND SALE
24 Hours 7 Days a Week Customer Support

T 1300 650 590 Wwww.fisherpaykel.com