N 50, WALL-MOUNTED CANOPY RANGEHOOD, 90 CM, BLACK
D94BHM1S5

The stylish Neff canopy rangehood is modern in design and keeps up with your cooking.

- √ Reduced Noise: Our optimised motor guarantees a quiet cooking experience.
- √ High Extraction Rate – ensures a clear view while cooking thanks to an efficient motor technology
- √ Intensive Speed Setting: Automatically boosts extraction when cooking steam becomes intense.
- √ LED Lighting: Clear illumination while you cook.
- √ Touch Control: An integrated flat surface control panel for smooth operation with a fingerswipe.

Color chimney:	Black
Typology:	Wall-mounted
Length electrical supply cord:	130 cm
Height of the chimney:	583-912/583-1022 mm
Height of product, without chimney:	53 mm
Minimum distance above an electric cooktop:	600 mm
Minimum distance above a gas cooktop:	650 mm
Net weight:	14.6 kg
Type of control:	Electronic
Number of power settings:	3-stages + intensive setting
Maximum output air extraction:	372 m^3/h
Boost position output recirculating:	441 m^3/h
Maximum output recirculating air:	337 m^3/h
Number of lights:	2
Noise level:	60 dB(A) re 1pW
Diameter of air outlet:	120 / 150 mm
Grease filter material:	Washable aluminium
EAN code:	4242004268826
Connection Rating:	220 W
Fuse protection:	10 A
Voltage:	220-240 V
Frequency:	50; 60 Hz
Plug type:	Standard 10 Amp plug
Installation type:	Wall-mounted

4 242004 268826

N 50, WALL-MOUNTED CANOPY RANGEHOOD, 90 CM, BLACK
D94BHM1S5

Design and Innovation
- 90 cm Canopy Rangehood
- Wall Hood black
- Appliance colour: black

Power and Mode of Operation
- TouchControl (3 power levels plus intensive setting) with LED display
- Electronic controls with low-lift push buttons
- Electronic controls via TouchControl with LED display
- Electronic controls
- TouchControl for power and light

Performance
- 3 power levels plus intensive setting via TouchControl
- 3 power levels plus intensive setting

Cleaning
- Dishwasher safe Metal grease filters

Safety and Quality

Convenience
- 2 x LED Lights
- Light Intensity: 214 lux
- Colour Temperature: 3500 K
- Efficient capacitor motor
- Automatic intensive revert setting - 6 min
- Twin channel high performance fan motor

Dimensions (HxWxD)
- Appliance width: 900 mm
- Dimensions exhaust air (HxWxD): 635-965 x 900 x 500 mm
- Dimensions recirculating (HxWxD): 635-1075 x 900 x 500 mm
- Dimensions recirculating with CleanAir module (HxWxD):
- 703 x 900 x 500mm - mounting with outer chimney
- Dimensions - Recirculated with cleanAir module (HxWxD):
- 703 x 900 x 500 mm
- Dimensions recirculating with CleanAir module (HxWxD):
- 703 x 900 x 500mm - mounting with outer chimney
- 833-1163 x 900 x 500 mm - mounting with telescopic chimney

Technical Information
- Suitable for ducted or recirculated extraction
- Accessories required for recirculated extraction: Recirculating kit
- Wall mounted rangehood
- T34-NE3A
- Noise min./max. Normal Level: 48/60 dB
- Extraction rate according to EN 61591 ø 15 cm: max. Normal use 372 m^3/h. Intensive 604 m^3/h
- Extraction rate exhaust air according to EN 61591: max. 604 m^3/h
- Maximum extraction 604 m3/h
- Extraction rate exhaust air according to EN 61591:
- max. normal use 372 m^3/h, intensive 604 m^3/h
- Noise level according to EN 60704-3 und EN 60704-2-13 at max. normal use exhaust air: 60 dB(A) re 1 pW (47 dB(A) re 20 µPa sound pressure)
- Noise level according to EN 60704-3 exhaust air:
- Max. normal use: 60dB(A) re 1 pW
- Intensive: 70 dB(A) re 1 pW
- Diameter pipe Ø 150 mm (Ø 120 mm enclosed)
- Max. extraction rate: 604 m3/h
- Power rating: 220 W
- Electrical cable length 1.3 m
- With the Clean Air Plus recirculation kit (available as accessory) your appliances reaches:
- Extraction rate in recirculation mode:
- Max. normal use: 337m^3/h
- Intensive: 441m^3/h
- Noise level in recirculation mode:
- Max. normal use: 70dB(A) re 1 pW
- Intensive: 74 dB(A) re 1 pW

N 50, WALL-MOUNTED CANOPY RANGEHOOD, 90 CM, BLACK
D94BHM1S5

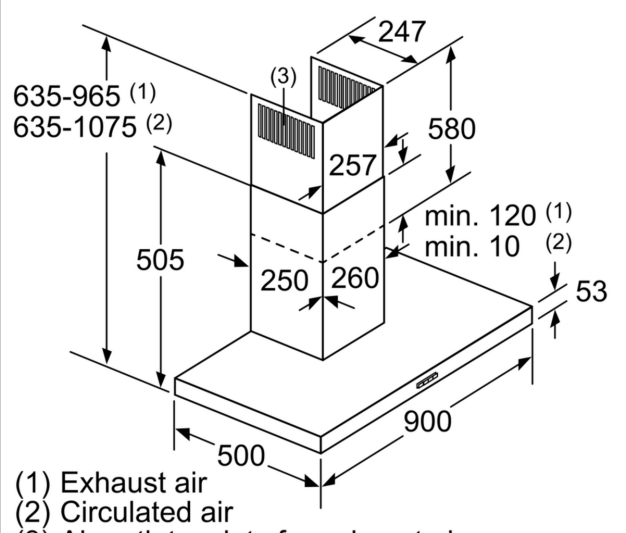

(1) Exhaust air
(2) Circulated air
(3) Air outlet – slots for exhaust air to be mounted facing down

measurements in mm

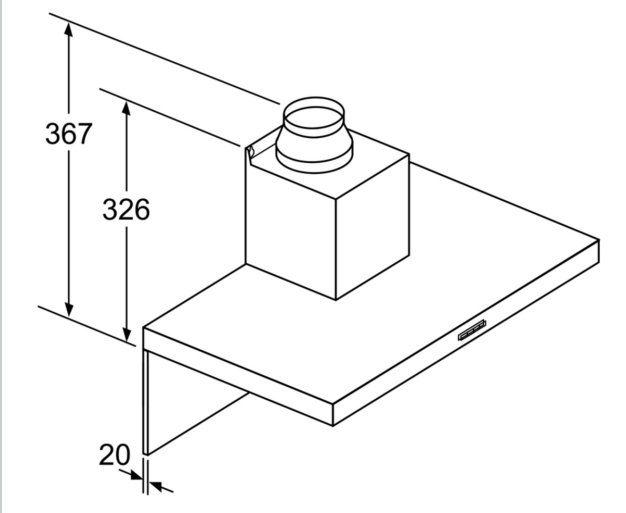

If a back panel is used, the design of the appliance must be considered.

measurements in mm

Measurements in mm

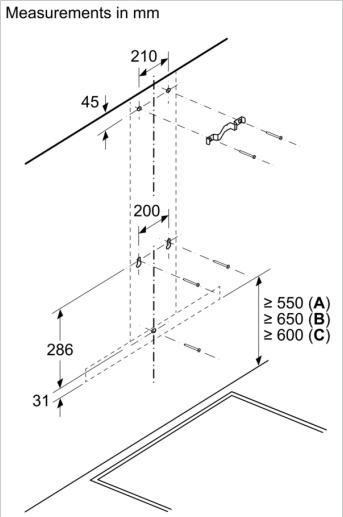

A: Electric

B: Gas - from upper edge of pan support

C: Electric - for Australia and New Zealand

Measurements in mm

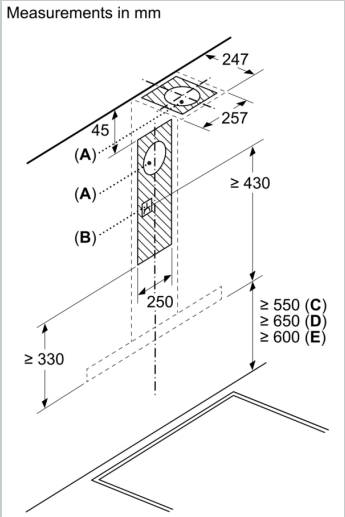

A: Exhaust air outlet
B: Socket
C: Electric
D: Gas - from upper edge of pan support

E: Electric - for Australia and New Zealand