N 70, WALL-MOUNTED CANOPY RANGEHOOD, 90 CM, MATT BLACK
D97BDN2S0

- √ Smart Hood Automatic: The matching rangehood automatically adjusts on your cooktop settings while cooking.
- √ High Extraction Rate – ensures a clear view while cooking thanks to an efficient motor technology
- √ Intensive Speed Setting: Increases the extraction rate when cooking steam is intense.
- √ High Performance and Low Noise: The optimised motor guarantees a quiet cooking experience.
- √ Touch Control: An integrated flat surface control panel for smooth operation with a fingerswipe.

Z51FBI1D6	Long-life Clean Air Kit

Typology:	Wall-mounted
Length electrical supply cord:	130 cm
Height of product, without chimney:	60 mm
Minimum distance above an electric cooktop:	600 mm
Minimum distance above a gas cooktop:	650 mm
Net weight:	16.9 kg
Type of control:	Electronic
Number of power settings:	3-stages + intensive setting
Maximum output air extraction:	399 m³/h
Boost position output recirculating:	677.0 m³/h
Maximum output recirculating air:	410 m³/h
Boost position air extraction:	699 m³/h
Number of lights:	2
Noise level:	56 dB(A) re 1 pW
Diameter of air outlet:	150 mm
Grease filter material:	Washable stainless steel
EAN code:	4242004287513
Connection Rating:	115 W
Voltage:	220-240 V
Frequency:	50; 60 Hz
Plug type:	Standard 10 Amp plug
Installation type:	Wall-mounted

4 242004 287513

N 70, WALL-MOUNTED CANOPY RANGEHOOD, 90 CM, MATT BLACK
D97BDN2S0

Design:
- Wall-mounted
- Suitable for ducted or recirculated extraction

Features:
- EfficientDrive: Efficient BLDC technology
- 2 x LED 3W with adjustable colour temperature lights
- Softlight: the lighting elements switch on and off smoothly.
- Dimming function: the brightness of the lighting elements can be adjusted.
- Colour Temperature: 3500 K
- Light Intensity: 461 lux
- 3 metal grease filter(s)

Comfort Features:
- Glass fascia front panel with integrated control elements for an easy operation
- Electronic control via backlit TouchControl
- 3 power levels plus intensive setting
- Automatic reset from intensive to normal setting after 6 min
- Automatic after running (10 minutes)

Digital Features:
- Home Connect: operate, monitor and set preferences of your rangehood via smartphone or tablet.
- Cooktop-based rangehood control: automatically activates the rangehood when cooking, thanks to the WiFi connection of the rangehood and a suitable cooktop.
- Smart Hood Automatic: Rangehood automatically adapts fan speed thanks to cooktop continuously providing cooking data (works with all current N90/N70 induction cooktops; for other Home Connect cooktop, the rangehood can be controlled directly from the cooktop, provided a connected Home Connect account is available)
- Voice Control enabled via popular voice assistants
- Customisable Performance Profiles: choose between standard, performance or silence profiles to increase the extraction rate or reduce the fan noise via Home Connect App
- LED light with adjustable light temperature: Allows you to adapt the light temperature to your personal needs via Home Connect App
- Saturation indicator, set and reset function for grease filter and odour filter available via Home Connect app.
- After run function: available via Home Connect App
- Interval function: available via Home Connect App
- The Home Connect functionality can be extended by integrating numerous applications from external cooperation partners (partnerships)
- Updateable appliance (available with connected Home Connect account): keep appliance always up to date with latest status of software.

Cleaning Comfort:
- Easy to clean smooth surfaces and materials
- Metal grease filter dishwasher-safe
- Coated surfaces to reduce fingerprints

Exhaust/Ducted Mode:
- According to EN 61591 and EN/ IEC 60704-2-13 your appliance can achieve the following values in exhaust mode: Speed 1: extraction rate 242 m3/h; noise level 43 dB (A) re1pW Speed 2: extraction rate 335 m3/h; noise level 51 dB (A) re1pW Speed 3: extraction rate 399 m3/h; noise level 56 dB (A) re1pW Intensive 1: extraction rate 699 m3/h; noise level 68 dB (A) re1pW

Recirculation Mode:
- For recirculation operation Long-life Clean Air recirculation kit (accessory) needed
- According to EN 61591 and EN/ IEC 60704-2-13 your appliance can achieve the following values in recirculation mode with Long-life Clean Air recirculation kit (available as optional accessory):
- Speed 1: extraction rate 239 m3/h; noise level 50 dB(A) re1pW
- Speed 2: extraction rate 334 m3/h; noise level 59 dB(A) re1pW
- Speed 3: extraction rate 410 m3/h; noise level 64 dB(A) re1pW
- Intensive Speed 1: extraction rate 677 m3/h; noise level 73 dB (A) re1pW
- The Long-life Clean Air odour filter absorbs intense odours, such as fish, as well as pollen. The lifetime can be extended up to 4 times by refreshing the filter in the oven

Technical Information:
- Consumption data:
- Power rating: 115 W
- Voltage: 220 - 240 V
- Sustainability:
- Made in Germany: produced at a CO2 neutral production site
- Expanded plastic free packaging
- Available Long-life Clean Air odour filter with extended lifetime up to 4 times

Planning and Installation Information:
- Reduced assembly effort thanks to the easy installation method
- Dimensions exhaust air (HxWxD): 635-895 x 898 x 500 mm
- Dimensions recirculating (HxWxD): 803-1080 x 898 x 500 mm
- Diameter pipe Ø 150 mm
- Electrical cable length 1.3 m

N 70, WALL-MOUNTED CANOPY RANGEHOOD, 90 CM, MATT BLACK
D97BDN2S0

Measurements in mm

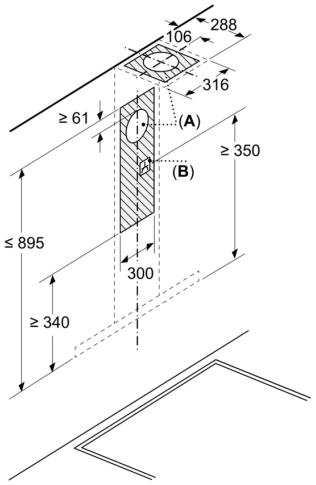

A: Exhaust air

B: Electrical connection

Measurements in mm
Wall installation with chimney

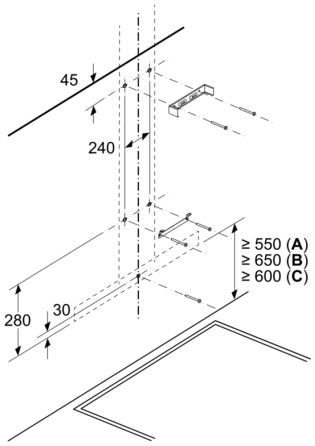

A: Electric

B: Gas - from upper edge of pan support

C: Electric - for Australia and New Zealand

Measurements in mm
Appliance in exhaust air mode

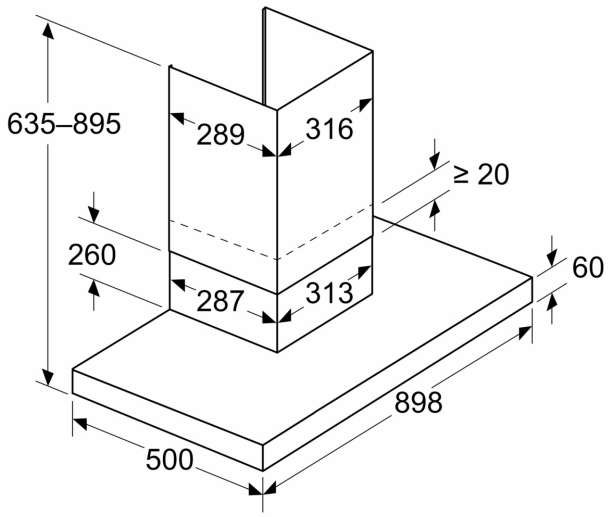

Measurements in mm
Recirculation perspective

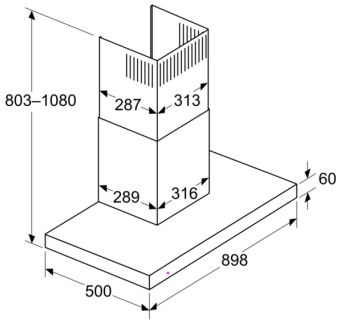

Recirculation mode with recirculation kit (the recirculation kit is only available as a separate accessory)

Measurements in mm
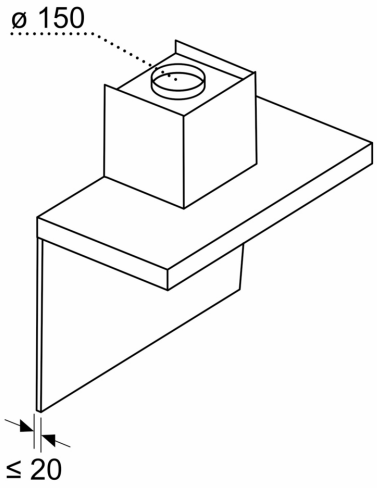
Wall panel depth