1300 11 4357 | support@residentiagroup.com.au
www.omegaappliances.com.au

omega

60cm 11 Function Oven with AirFry
Midnight

SERIES

Contemporary

AESTHETICS

- Black Glass with Midnight Trim
- Midnight Fluted Steel Knobs
- Midnight Aluminium Handle
- Black Tinted Triple Glazed Door
- Grey Crystal Clean Enamel Cavity

FUNCTIONALITY

- Capacity: 85L Gross / 75L Net
- 11 × Functions inc. AirFry
- Knob Control with Touch Control Timer
- 30–260°C Temperature Range
- LED Display
- 5 × Shelf Positions
- 1 × Interior Lamp
- Turbo Ring Element
- Cavity Cooling System

FUNCTIONS

1. Light	7. Pizza
2. Conventional	8. Fan Bake
3. Fan Forced	9. Multi Cooking
4. Fan & Grill	10. Defrost
5. Grill	11. AirFry
6. Maxi Grill	

ACCESSORIES

- 2 × Chrome Wire Shelves
- 1 × Enamelled Baking Tray
- 1 × Grill Insert
- 1 × AirFry Tray

CLEANING

- Steam Refresh
- Removable Door and Inner Glass

SIZE, W/D/H (MM)

Packaged	639 × 579 × 660
Physical	594 × 500 × 595

WEIGHT (KG)

Net: 34	Gross: 37.5

INSTALLATION

Underbench or Wall Tower Installation

POWER REQUIREMENTS

Power Connection	15 Amp, Hardwired
Rated Voltage	220–240V~
Rated Frequency	50Hz
Maximum Power	2900–3400W

ADDITIONAL DETAILS

Barcode	9349260096790
Warranty	3 Years

FRONT VIEW

Note: See the user manual for detailed ventilation and installation details

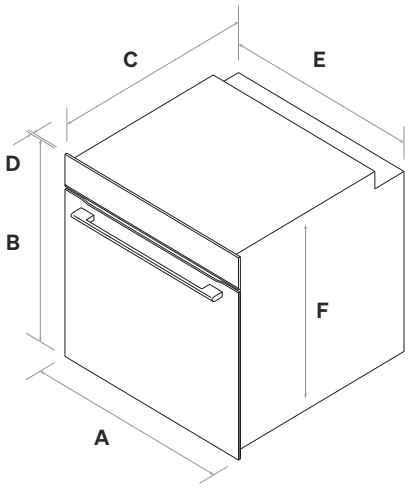

DIMENSIONS (MM)

A 594	B 595	C 500
D 21	E 555	F 580

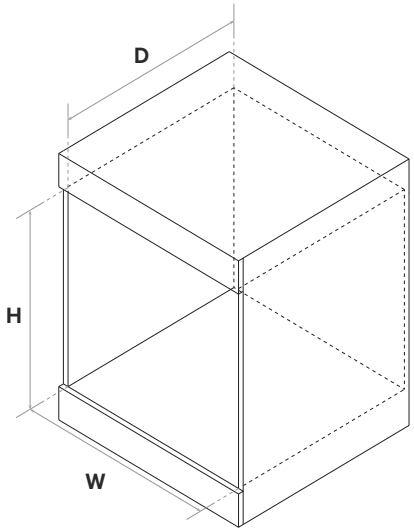

MINIMUM INSIDE CAVITY (MM)

W 596	D 520 (Proud)
H 596	D 580 (Flush)

Date: October 25, 2024 2:24 pm. This Specification Sheet should not be used as installation guidance for any product.
Installation guides will be provided with the physical product and are also on our website omegaappliances.com.au