SOA6606M2PNR



Category	60cm
Product Family	Oven
Power supply	Electric
Cooking method	Combi Microwave
Galileo Technology	SpeedwaveXL
Cleaning system	Vapour Clean
EAN code	8017709320867

Aesthetics

Aesthetic	Dolce Stil Novo	**Glass Type**	Eclipse
Colour	Black	**Door**	Full glass
Finishing	Glossy	**Handle**	Dolce Stil Novo
Design	Flat	**Handle Colour**	Black
Component finish	Copper	**Logo**	Applied
Material	Glass		

Controls

Display name	VivoScreen max	**No. of display languages**	20
Display technology	TFT		
Control setting	Advanced full touch	**Display languages**	Italiano, English (UK), Français (FR), Français (CA), Nederlands, Español (ES), Español (MX), Português (PT), Svenska, Русский, Deutsch (DE), Dansk, Norsk, Polski, English (AU), Suomi, Ukrainian, Kazakh, Afrikaans (ZA), Zulu (ZA)

Programs / Functions

No. of cooking functions	26
Automatic programmes	150
Customisable recipes	10

Traditional cooking functions

- Static
- Fan assisted
- Circulaire
- Turbo
- Eco
- Large grill
- Fan grill (large)
- Base
- Circulaire + bottom
- Pizza

Microwave functions

- Microwave
- Fan assisted
- Circulaire
- Microwave + grill
- Microwavews + Circulaire + bottom
- Warming and re-generation

Other functions

- Defrost by time
- Defrost by weight
- Proving
- Stone cooking
- BBQ
- Air-Fry
- Keep warm
- Plate rack/warmer
- Sabbath

Cleaning functions

- Vapour Clean

Options

Time-setting options	Delay start and automatic end cooking
Minute minder	Yes
Timer	3
Controls Lock / Child Safety	Yes
Other options	Keep warm, Eco light, Language setting, Digital clock display, Brightness, Tones, Tones volume
Cooking with probe thermometer	Yes
Multi-step cooking	Yes, up to 3 steps
Smart cooking	Yes
SameTime	Yes
DeltaT cooking	Yes
Showroom demo option	Yes
Demo-tutorial mode	Yes
Touch guide	Yes
Chronology	Yes, the last 10 functions utilised
Rapid pre-heating	Yes
Instant GO	Yes

Technical Features

Capacity (Lt)	68 l	**Door opening type**	Standard opening
Cavity	QS-Galileo	**Door**	Cool
Minimum Temperature	30 °C	**Full glass inner door**	Yes
Maximum temperature	250 °C	**Total no. of door glasses**	4
No. of shelves	5	**Soft Close hinges**	Yes
N. of fans	1	**Soft Open**	Yes
No. of lights	2	**Inverter**	Yes
Light type	multilevel LED	**Stirrer**	Yes
Light Power	5 W	**Chimney**	Double
Light when door is opened	Yes	**Cooling system**	Centrifugal
		Cooling duct	Double
Lower heating element power	1200 W	**Speed Reduction Cooling System**	Yes
Upper heating element - Power	1000 W	**Usable cavity space dimensions (HxWxD)**	353x470x397 mm
Grill element - power	1700 W	**Temperature control**	Electronic
Large grill - Power	2700 W	**Cavity material**	Ever clean Enamel
Circular heating element - Power	2000 W	**Tank capacity**	2 l
Heating suspended when door is opened	Yes		

Performance / Energy Label

Net volume of the cavity	68 l	**Microwave effective power**	900 W
Number of cavities	1		

Accessories Included

Premium rack	1	**Glass tray**	1
Enamelled deep tray (50mm)	1	**Telescopic Guide rails, total Extraction**	1
Insert gird	1	**Temperature probe**	Yes, multipoint

Electrical Connection

Voltage	220-240 V	**Nominal power**	3000 W
Plug	(I) Australia	**Frequency (Hz)**	50/60 Hz
Current	13 A	**Power supply cable length**	115 cm

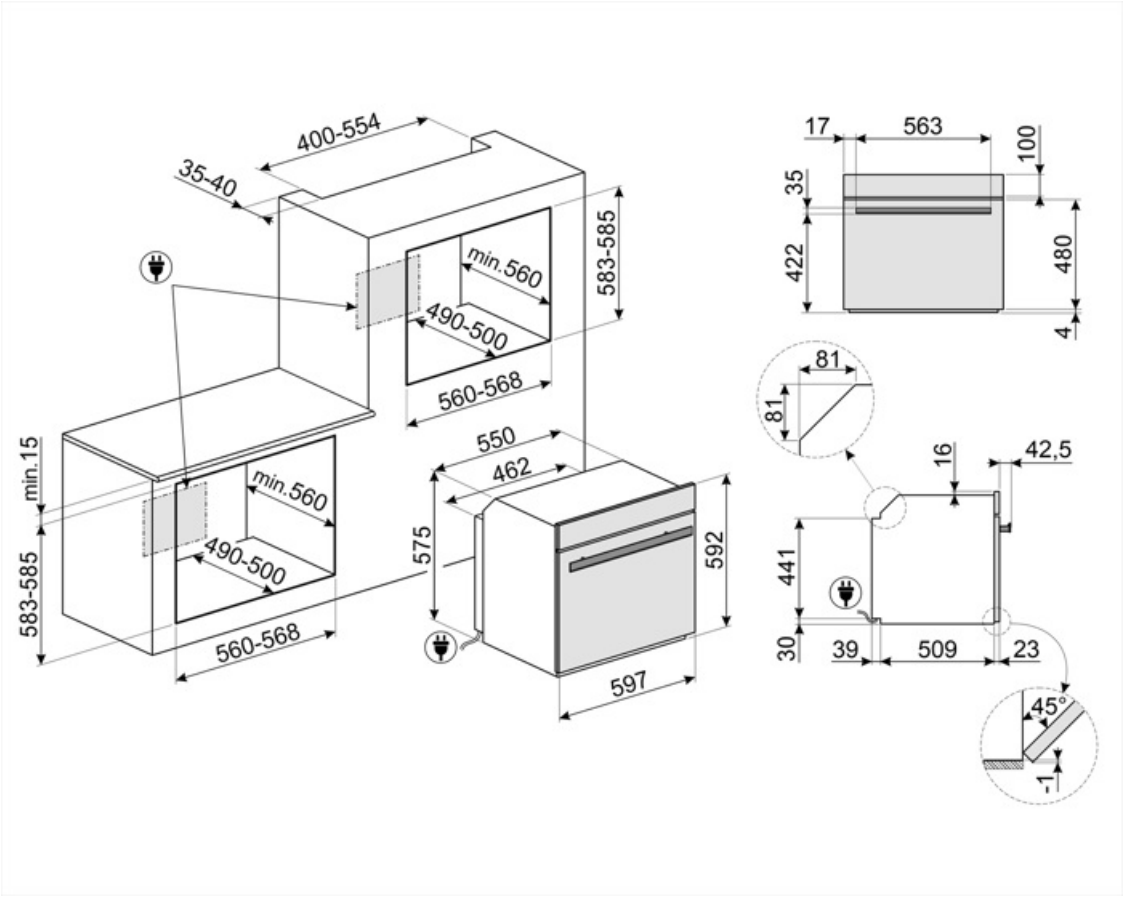
400-554
35-40
min.560
490-500
583-585
560-568
min.15
583-585
min.560
490-500
560-568
550
462
575
592
597
17
563
100
35
422
480
4
81
81
16
42,5
441
30
39
509
23
45°
1

Compatible Accessories



BBQ

Double sided plate BBQ. Suitable for recreating succulent and crispy dishes in the oven with the typical taste of grilled cooking. The ribbed side is particularly suitable for meats and cheeses. The smooth side for fish, seafood and vegetables.



ET50

Enamelled tray, 50mm deep



STONE2

Rectangular pizza stone without handles, suitable for 45cm and 60cm wide ovens. Dimensions W42 x H1.8 x D37.5cm. Ideal for cooking pizzas with the same results as a typical wood-fired oven. Can also be used for baking bread, focaccias and other recipes such as pies, flans or biscuits



ET20

Enamelled tray, 20mm deep



GTT2

Totally extractable telescopic guides (1 level), suitable for traditional ovens. Made in stainless steel, they guarantee stability and facilitate the smooth extraction of the trays.

Symbols glossary



Dedicated cooking function for the double sided plate BBQ. Suitable for recreating succulent and crispy dishes in the oven with the typical taste of g



Combination microwave: This oven allows to combine two different ways of cooking (Traditional with microwaves). Combined ovens increase cooking opportunities,while providing maximum flexibility of household appliances.



Defrost by weight: With this function the defrosting time is determined



Automatic lighting switches off: for greater energy savings, the lighting switches off automatically after one minute from the start of cooking.



Enamel interior: The enamel interior of all Smeg ovens have a special antacid lining which helps keep the interior clean by reducing the amount of cooking grease adhering to it.



Fan with upper and lower elements: The elements combined with the fan aim to provide more uniform heat, a similar method to conventional cooking, so pre-heat is required. Most suitable for items requiring slow cooking methods.



Lower heating element only: This function is ideal for foods that require extra base temperature without browning, e.g. pastry dishes, pizza. Also suitable for slow cooking of stews and casseroles.



Circulaire: The combination of the fan and circular element around it gives a hot air cooking method. This provides many benefits including no preheat if cook time is more than 20 minutes, no flavour transfer when cooking different foods at the same time, less energy, and shorter cook times. Good for all types of food.



Grill element: Using of grill gives excellent results when cooking meat of medium and small portions, especially when combined with a rotisserie (where possible). Also ideal for cooking sausages and bacon.



Child lock: some models are fitted with a device to lock the programme/cycle so it cannot be accidentally changed.



Defrost by time: with this function the time of thawing of foods are determined automatically.



Quadruple glazed: Number of glazed doors.



Electric



Fresh Touch: Most of Smeg ovens have a "cool door." Thanks to the combination of tangential cooling and internal heat-reflecting glasses, the temperature on the outer surface of the door is maintained below 50° C. In addition to providing safety, this system protects the sides of the furniture from overheating by the oven.



Upper and lower element only: a traditional cooking method best suited for single items located in the centre of the oven. the top pf the oven will always be hottest. Ideal for roast, fruit cakes, bread etc.



Circulaire with lower element: The addition of the lower element adds extra heat at the base for food which requires extra cooking.



ECO: The combination of the grill, fan and lower element is particularly suitable for cooking small quantities of food.



Fan with grill element: The fan reduces the fierce heat from the grill, providing an excellent method of grilling various foods, chops, steaks, sausages etc. giving even browning and heat distribution, without drying out the food. The top two levels recommended for use, and the lower part of the oven can be used to keep items warm at the same time, an excellent facility when cooking a grilled breakfast. Half grill (centre portion only) is ideal for small quantities of food.



Microwave: Penetrating straight into the food, microwaves cook very quickly and with considerable energy savings. Suitable for cooking without fat, they are also able to thaw and heat food without altering its original appearance and aroma. The microwave function can also be combined with conventional functions with all the resulting advantages. Ideal for all types of food.



Microwave + grill element: The use of the grill results in a perfect browning of the surface of the food. The action of microwaves allows instead of cooking in a short time the internal part of the food.



This function can reheat precooked dishes, without becoming dry or hard.



Circulaire with upper and lower elements: The use of the fan with both elements allows food to be cooked quickly and effectively, ideal for large joints that require thorough cooking. It offers a similar result to rotisserie, moving the heat around the food, instead of moving the food itself, enabling any size or shape to be cooked.



KEEP_WARM_72dpi



Cooking with temperature probe: It is possible to display the temperature detected by the probe and set a target temperature that the dish must reach. When the core of the dish reaches the desired temperature, cooking stops



Rapid preheat: The rapid preheat function can be used to reach the selected temperature in just a few minutes.



Touch guide: By holding down any symbol for 3 seconds you can get information on its function



Smart Cooking System: for the perfect cooking it is simply necessary choosing the kind and the weight of food and the cooking temperature: any other setting will be established automatically.



Step cooking: It is possible to set up to 3 cooking phases in the same recipe by varying function, time and / or temperature. At the end of a phase the next one will start automatically



Cooking with the simultaneous use of the heating element in combination with fan and microwave supply.



Fan combined with traditional cooking, where heat is generated from above and below, provides uniform heat. Adding the microwave function allows the same cooking results in less time.



Pizza function: The simultaneous operation of three elements ensures an optimum cooking facility when used with the Smeg pizza stone.



All glass inner door: All glass inner door, a single flat surface which is simple to keep clean.



Warming up: An option for dish warming and keeping the prepared meals hot.



Air at 40°C provides the perfect environment for proving yeast type dough mixes. Simply select the function and place dough in the cavity for allotted



Sabbath: This function allows you to cook food during the Sabbath, the Holiday of rest in the Jewish religion, respecting the precepts. The oven works



The oven cavity has 5 different cooking levels.



Soft close: all models are equipped with advanced function of smooth closing of the door, which allows the device to close smoothly and quietly.



Telescopic rails: allow you to pull out the dish and check it without having to remove it from the oven entirely.

Electronic control: Allows you to maintain temperature inside the oven with the precision 2-3 ° C. This enables to cook meals that are very sensitive to temperature changes, such as cakes, souffles, puddings.

Vapour Clean: a simple cleaning function using steam to loosen deposits in the oven cavity.

The capacity indicates the amount of usable space in the oven cavity in litres.

The capacity indicates the amount of usable space in the oven cavity in litres.

The 6.3" VIVOscreen Max display is the most complete and advanced colour touch interface available for the automatic management of firing programmes such as Delta T, Multi-step and SameTime firing.

Keep warm: the function allows to keep cooked food warm.

INSTANT GO: activating this option allow to start cooking immediately. Preheating is included in the cooking time and the oven will gradually reach the desired temperature Particularly suitable for frozen foods.

Active and controlled microwave distribution. The Microwave Stirrer fan distributes the waves evenly within the oven, reducing the need for a turntable.

The multi-point temperature probe has three detection points. This means that not only the core temperature is detected, but also the temperature in other areas. The oven will process all these data to avoid cooking unevenness. In this way each product can be cooked in a professional, restaurant style.

The latest generation of LED lights, positioned over the entire height of the cavity, guarantee perfect multi-level visibility. No matter how many trays you put in the oven, the food inside will always be clearly visible and you can check the progress of the cooking process. In addition to the guaranteed efficiency, the LED lights also have a modern look and low energy consumption, saving up to 80% of costs and lasting 25 times longer than traditional halogen bulbs.

The perfect way to have a complete menu in a few simple steps with a considerable saving of time. The large cavity can accommodate multiple types of food at the same time, which can be cooked without any exchange of odors. The carefully studied thermodynamic flows ensure uniform cooking at every level. The SameTime algorithm calculates the times, the cooking functions and all the parameters so that 3 foods can be ready at the same time.

The inverter technology allows to generate microwaves continuously and at the desired power. The constant flow, without on and off cycles, allows you to precisely control the temperature, reduce times, avoids wasting energy and allows you to obtain excellent cooking, defrosting and re-heating results, thanks to the smaller difference between core and surface temperature in food.

Dedicated cooking function for the Air fryer rack AIRFRY . Ideal for recreating traditional frying in the oven, but with fewer calories and less fat.

Dedicated cooking function for the rectangular refractory stone PPR2 Dimensions Ideal for cooking pizzas with the same results as a typical wood-fire



The double chimney technology create a special airflow inside the cavity that reduce the condensation inside the cavity during microwave cooking, whe



DeltaT cooking The oven automatically sets the cavity temperature to a predefined temperature (named deltaT) higher than the core temperature detected by the probe. When the probe detects an extra degree at the core, the oven automatically increases also its internal temperature by one degree. The oven offers the possibility to choose between three different deltaT cooking modes (slow, medium and fast) and to set any desired core temperature. A concentration of technology that makes it possible to obtain tender, juicy, healthy products of the highest quality.