Monte Carlo 60

Technical Specifications

SPECIFICATIONS

Model	X3M06S
Hood Mounting	Undermount

DIMENSIONS

Hood Width	560mm
Hood Depth	280mm
Hood Height	330mm

SUITABILITY

Cooking Surface Coverage (cm)	50-75cm
Min Install Height	650mm
Recommended Install Height	700-750mm
Induction Suitable	•

FINISH

AISI304 1.2mm Food Grade	•

FILTRATION

Type: S-Flow Baffle	•
Filter Quantity	2

ELECTRONICS

MasterMind	•
Controls	MasterMind Electronic
Wireless Remote	○
Speed Settings	3 Speed + Boost Mode
Timer Function	Programmable Timer
Auto Fan Shut Off	2-Hours Of Inactivity

LIGHTING

Type: LED Warm White	•
Type: LED Cool White	○
Lamp Quality	2
Front Panel	•
Rear Panel	-

EXHAUST

Outlet Position - Top	•
Outlet Position - Rear	○
Outlet Quantity	1
Ducting (Remote Motor)	Zilikon Duct 5M Supplied
Ducting (Onboard Motor)	Power Motor - Dia. 150mm
	Ultra Motor - Dia. 200mm

MODEL SELECTION

Remote	Inline	Pro 1140m²/hr	X3M06S5.IP
	External	Pro 1140m²/hr	X3M06S5.EP
	External	Pro Plus 2010m²/hr	--
On Board	Top Duct	Power 1020m²/hr	X3M06S5.OP/T
	Rear Duct	Power 1020m²/hr	X3M06S5.OP/B
	Top Duct	Ultra 1680m²/hr	X3M06S6.OU/T
	Rear Duct	Ultra 1680m²/hr	X3M06S6.OU/B

• Standard Inclusion ○ Optional - Not Available

5 YEAR WARRANTY COMPREHENSIVE PARTS & LABOUR

10 YEAR WARRANTY REPLACEMENT REMOTE FAN MOTOR

LIFETIME REPLACEMENT PARTS WARRANTY

PRODUCT IMAGES

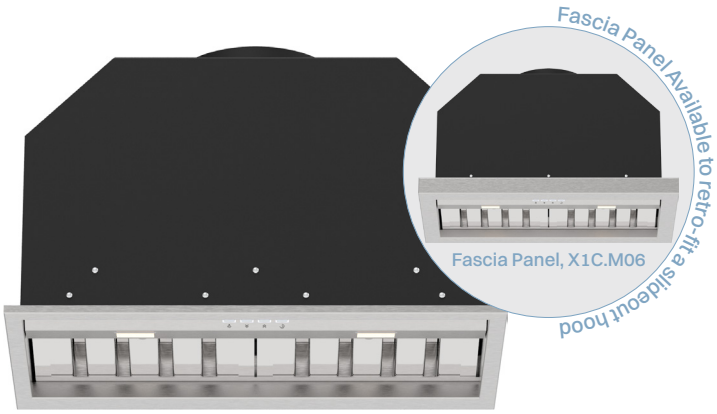



Filtration Zone.

DIMENSIONED DRAWING

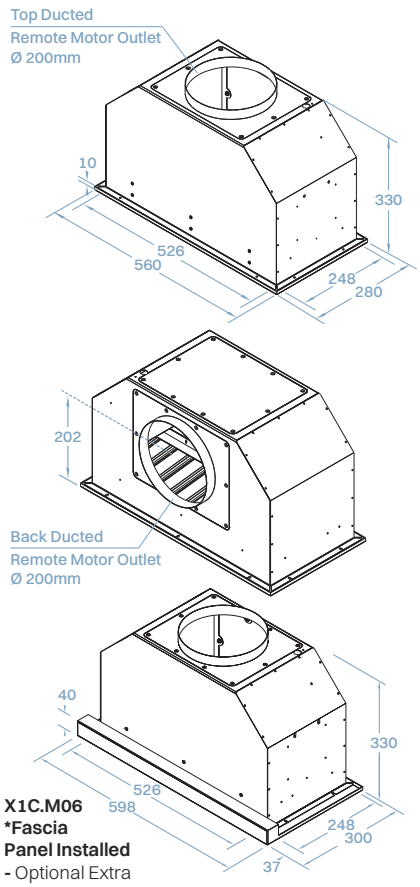

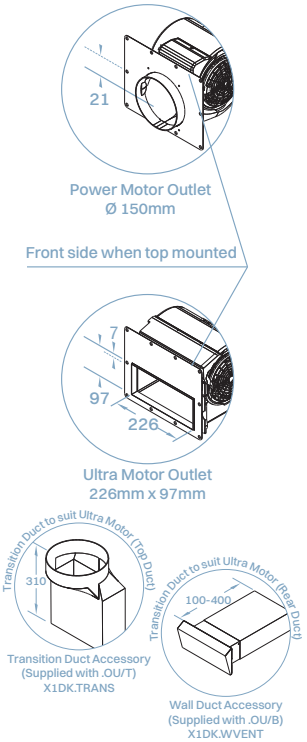

X1C.M06
***Fascia Panel Installed**
- Optional Extra

haus.

AU | 03 8593 9600 | www.whispair.com.au
NZ | 09 887 6959 | www.whispair.co.nz

whispair