PARIS 36 ISLAND. X7P04S.

Specifications

Model No.		X7P04S
Hood Mounting		Island Mount Canopy
Dimensions	**Hood Width**	362mm
	Hood Depth	362mm
	Hood Height	800mm*
Cooking Surface Coverage (cm)		60-75cm
Min Install Height		600mm
Recommended Install Height		700-750mm
Induction Suitable		●
Char Grill Suitable		-
Finish	**AISI304 1.2mm Food Grade**	●
	AISI316 1.2mm Marine Grade	-
Filtration	**Type: S-Flow Baffle**	●
	Filter Quantity	1
Electronics	**MasterMind**	●
	Controls	4-Button Backlit LED MasterMind Electronic Control
	Wireless Remote	○
	Speed Settings	3 Speed + Boost Mode
	Timer Function	Programmable Timer 10min Increments
	Auto Fan Shut Off	Auto Off After 2-Hours Of Inactivity
Lighting	**Type: LED - Warm White**	●
	Type: LED - Cool White	○
	Lamp Quantity	2
	Front Panel	●
	Rear Panel	●
Exhaust	**Outlet Position - Top**	●
	Outlet Position - Rear	-
	Outlet Quantity	1
	Ducting (Remote Motor)	Zilikon Duct - Dia. 200mm 5M Length Supplied
	Ducting (Onboard Motor) Not Supplied - Duct Kits Available	Power Motor - Dia. 150mm Ultra Motor - Dia.200mm

SELECT YOUR HOOD & MOTOR COMBINATION		X7P04S5 / X7P04S6
On Board	**Power 1020 - Top** 1020m³/hr	.OP/T
	Ultra 1680 - Top 1680m³/hr	--
Inline	**Lite 800** 800m³/hr	.IL
	Pro 1140 1140m³/hr	.IP
External	**Lite 800** 800m³/hr	.EL
	Pro 1140 1140m³/hr	.EP
	Pro Plus 2010 2010m³/hr	--

● Standard Inclusion ○ Optional - Not Available

5 YEAR WARRANTY COMPREHENSIVE PARTS & LABOUR

10 YEAR WARRANTY REPLACEMENT REMOTE FAN MOTOR

LIFETIME REPLACEMENT PARTS WARRANTY

PROUDLY AUSTRALIAN OWNED
DESIGNED & BUILT IN MELBOURNE

PREMIUM GERMAN MADE
MOTOR SYSTEMS



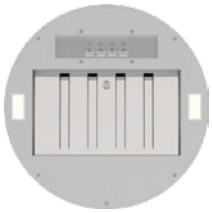

Filtration Zone.

Your Hood. Your Colour. Your Way. Select your hood finish.

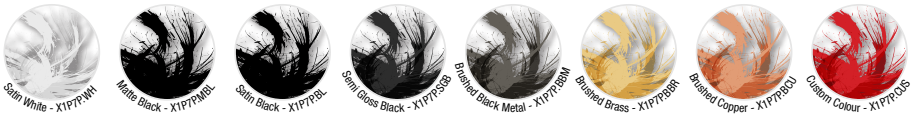

Dimensioned Drawing

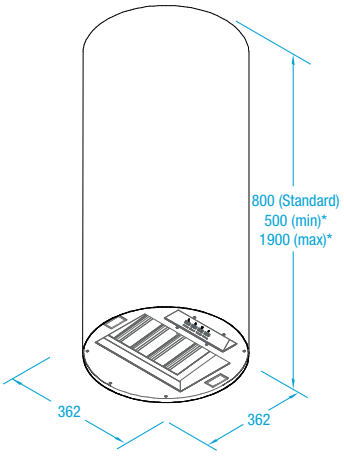

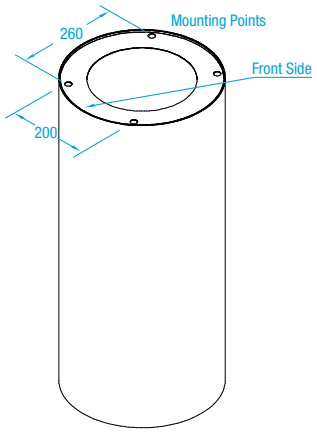

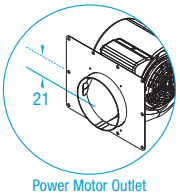

Power Motor Outlet
Ø 150mm